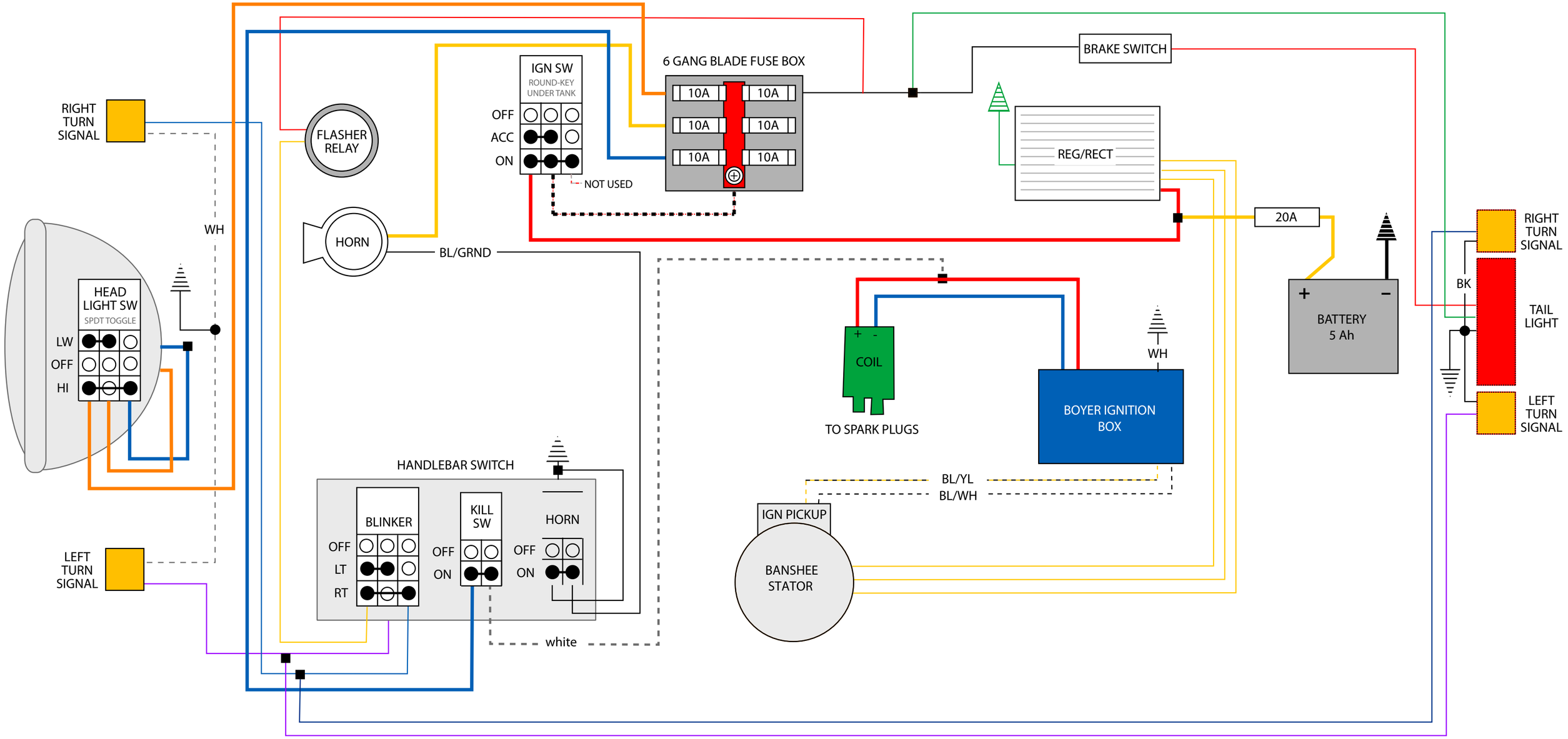1981 XS650 SIMPLE WIRING • KICK ONLY • BOYER IGNITION • PMA BANSHEE STATOR • 5Ah BATTERY • REPLACED SWITCHES • UPGRADED FUSE BOX